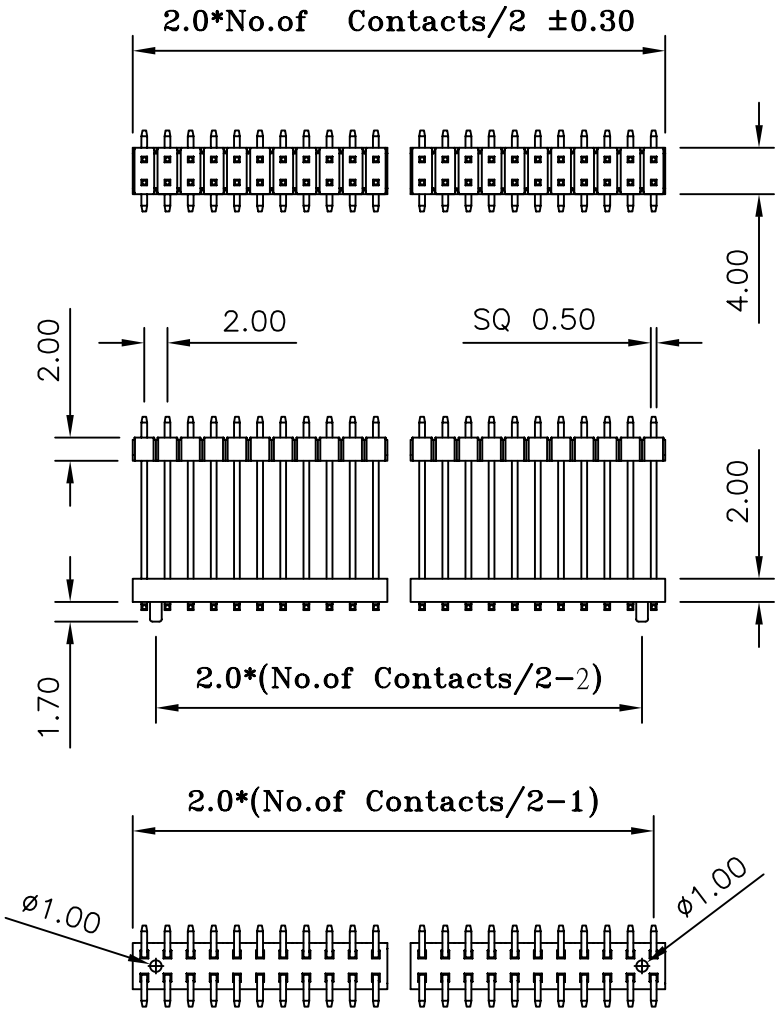

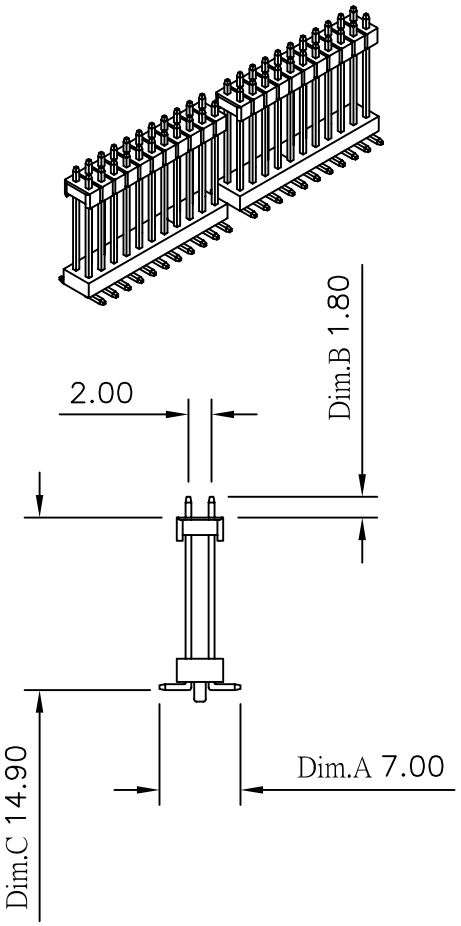

Current Rating:	2 Amps
Insulator Resistance:	5000 Megohms min
Contact Resistance:	20 m ohms max
Dielectric Withstanding:	500 V AC
Operating Temperature:	- 40° ~ +105° C
Max Processing Temp:	230° C for 60 seconds
Max Processing Temp:	260° C for 10 seconds
Contact Material:	Copper Alloy
Insulator Material:	Polyester,UL 94V-0 Standard: Nylon-6T

Finish: Tin,Gold Plated
Standard:Gold Flash all over

Recommended P.C. Board
SMD Layout

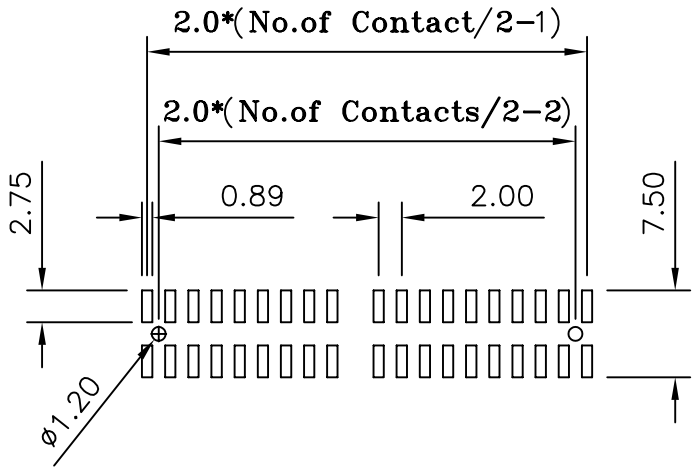

(RoHS Compliant)

H2 N 20 X - 2 XX D1 BK X D02 X
1 2 3 4 5 6 7 8

1. Insulator Material:
   N= Nylon−6T
2. P= Phosphor Bronze
   Blank= Brass
3. Per Row 02~40 pin
4. Taill Style:
   D1= S.M.D With Peg Type
5. Color: BK=Black
   WH=White
6. Contact Plated:
   T=Matte Tin over Nickel
   W=Matte Tin over Nickel 150u"
   Y=Bright Tin over Nickel
   C=Gold Flash
   F=Gold Flash,Matte Tin 100u"
   A=Gold 3u"
   B=Gold 3u",Matte Tin 100u"
   D=Gold 5u"
   E=Gold 5u",Matte Tin 100u"
   G=Gold 10u"
   J=Gold 10u",Matte Tin 100u"
   L=Gold 15u"
   M=Gold 15u",Matte Tin 100u"
   U=Gold 30u"
   V=Gold 30u",Matte Tin 100u"
7. Special Options
8. Packing:
   B= Tube
   D= Box

①:H2N20-2XXD1BKXD02-2007/02/05-C

CONN TOP COMPONENT INC.	PART NO	H2N20X-2XXD1BKXD02X		.X ±0.3	.XX ±0.20	.XXX ±0.100
BOM 1: H2N20-2XXBKH0	DRAWING NO	PHA-00025	EDITION: C1	ITEM: PHA
BOM 2: QT-0.50X 18.70BN	DRAWN BY	GARY	2009/01/13	SCALE: 1:1
BOM 3: PHA-2XXH				
TEL:(02)86481727 FAX:(02)86482427	APPROVAL BY			UNIT: m.m