Current Rating:	3 Amps
Insulator Resistance:	5000 Megohms min
Dielectric Withstanding:	1000 VAC
Contact Resistance:	20 m ohms max.
Operating Temperature:	- 40° ~ +105° C
Contact Material:	Copper Alloy
Insulator Material:	Polyester,UL 94V-0 Standard: PBT

Finish: Gold Plated or Duplex Plated

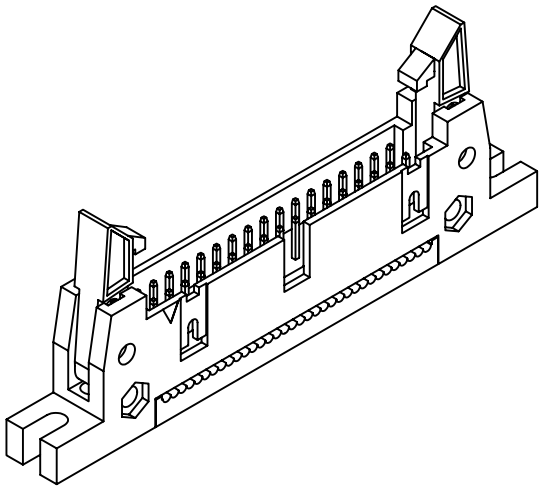

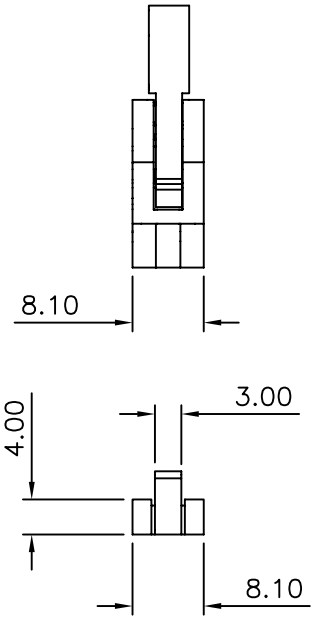

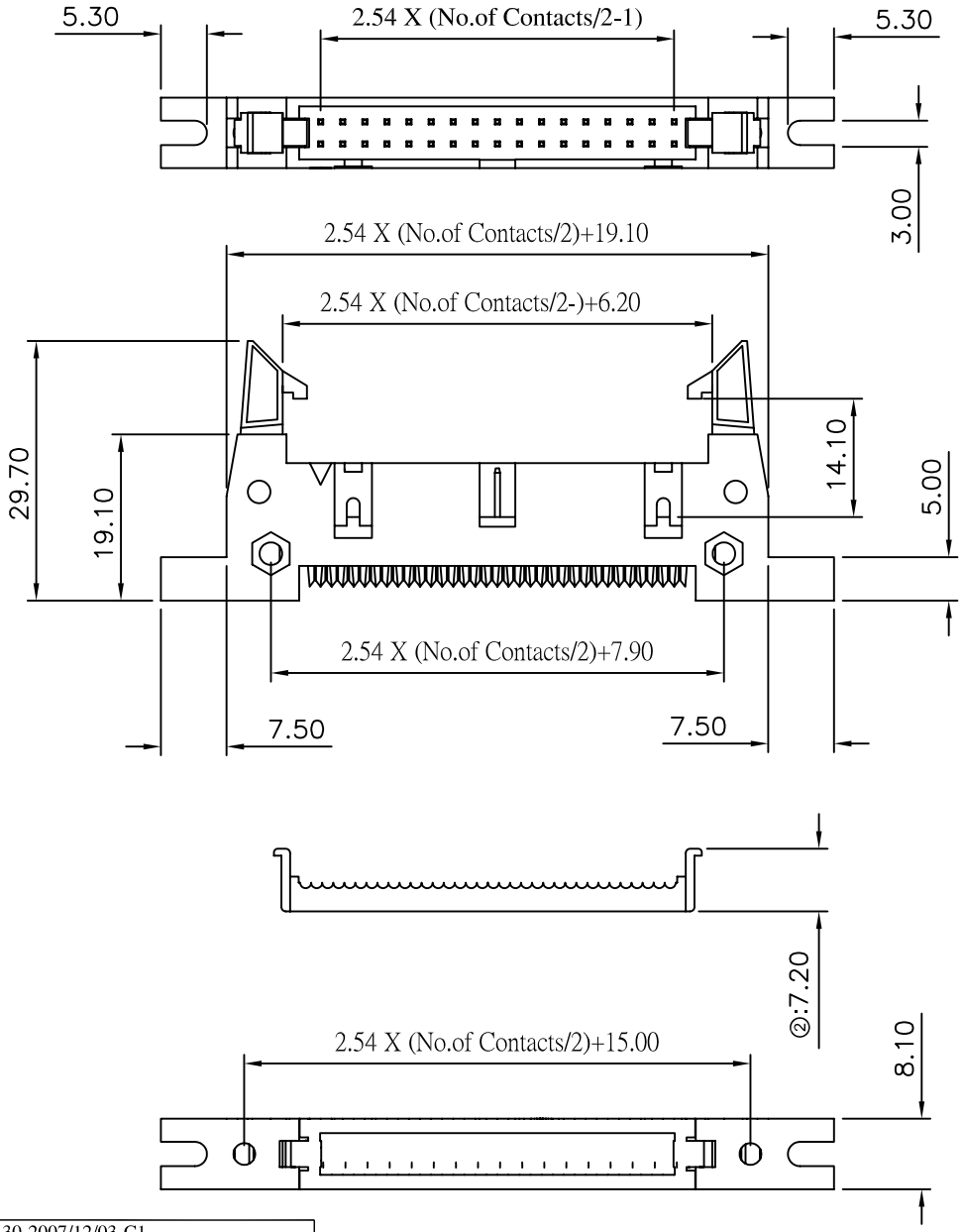

(RoHS Compliant)

LF1 A - XX B L GR X 000
1 2 3 4 5 6 7

1. Insulator Material:
   A= P.B.T.
2. Circuits:10 ~ 64pin
3. B= With EAR
4. L= Long Latch
5. Color: BK=Black
   GR=Gray
6. Contact Plated:
   T=Matte Tin over Nickel
   W=Matte Tin over Nickel 150u"
   Y=Bright Tin over Nickel
   C=Gold Flash
   N=Gold Flash,Ni 50u"
   A=Gold 3u"
   B=Gold 3u",Ni 50u"
   D=Gold 5u"
   E=Gold 5u",Ni 50u"
   G=Gold 10u"
   J=Gold 10u",Ni 50u"
   L=Gold 15u"
   M=Gold 15u",Ni 50u"
   U=Gold 30u"
   V=Gold 30u",Ni 50u"
7. Special Options

②:6.30-2007/12/03-C1
①:LF1XX-XXBLGRX 000-2007/06/04-C

CONN TOP COMPONENT INC.	PART NO	LF1A-XXBLGRX000	.X ±0.3	.XX ±0.20	.XXX ±0.100
BOM 1: LF1A-XXGRHB 2: LF1A-XXGRM0 3: LFT-0920-01 4: LH1X-GREL	DRAWING NO	LF-00016	EDITION: C2	ITEM: LF	
	DRAWN BY	GARY	2008/08/05	SCALE: 1:1	
TEL:(02)86481727 FAX:(02)86482427	APPROVAL BY			UNIT: m.m	