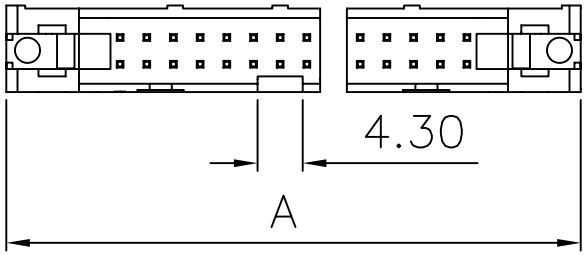

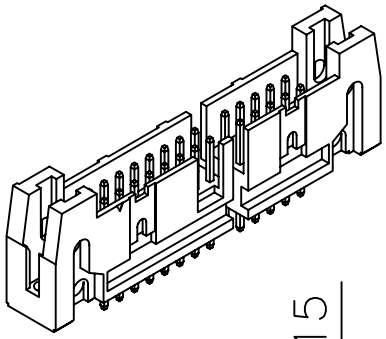

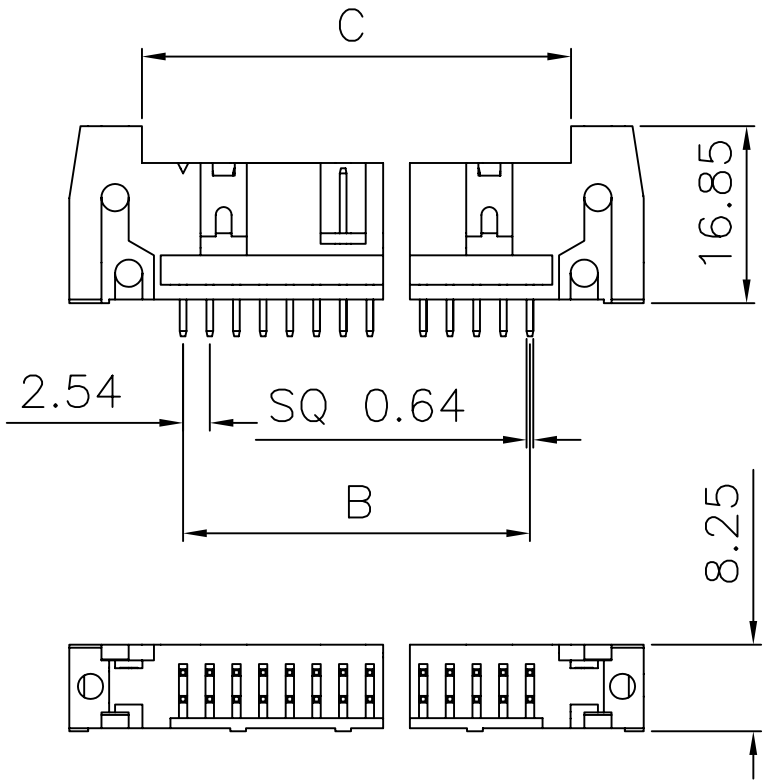

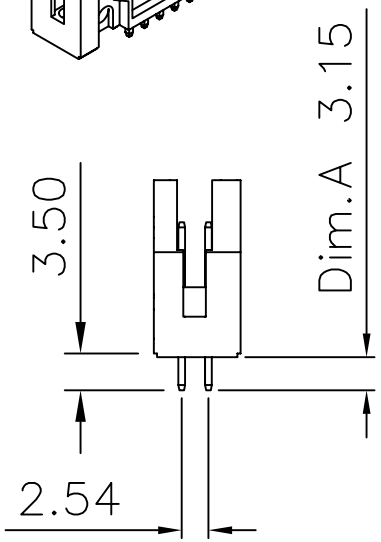

Current Rating: 3 Amps
Insulator Resistance: 5000 Megohms min
Contact Resistance: 20 m ohms max.
Dielectric Withstanding: 1000 VAC
Operating Temperature: - 40° ~ +105° C
Contact Material: Copper Alloy
Insulator Material: Polyester,UL 94V-0
Standard: PBT

Finish: Gold Plated or Duplex Plated
Standard: Gold Flash all over
Note:
Duplex Plating: Gold Plated on contact area,
Tin on solder area

Insulator Material: Polyester,UL 94V-0
Standard: Nylon-6T

Max Processing Temp: 230° C for 60 seconds
Max Processing Temp: 260° C for 10 seconds

CONTACTS	10 pin	12 pin	14 pin	16 pin	20 pin	24 pin
A	31.90	34.60	36.98	39.52	44.60	49.68
B	10.16	12.70	15.24	17.78	22.86	27.94
C	18.00	20.54	23.08	25.62	30.70	35.78
CONTACTS	26 pin	30 pin	34 pin	40 pin	50 pin	
A	52.15	57.40	62.38	70.00	82.70	
B	30.48	35.56	40.64	48.26	60.96	
C	38.32	43.40	48.48	56.10	68.80	

Recommended P.C. Board
Hole Layout

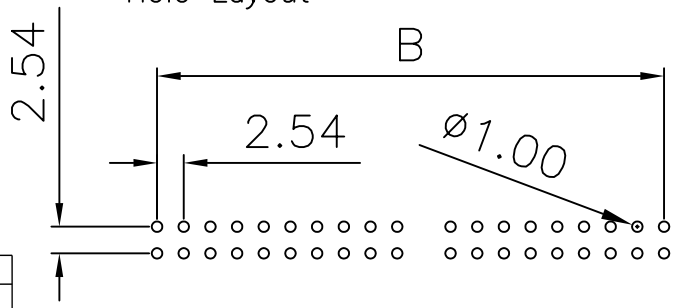

(RoHS Compliant)

LH1 X X - XX SN BK X 000 C
1 2 3 4 5 6 7 8

1. Insulator Material:
   A= P.B.T
   N= Nylon-6T
2. A= Phosphor Bronze
   Blank=Brass
3. Circuits: 10~50 pin
4. Taill Style:
   SN= Straight W/o Latch
5. Color: BK=Black
   GR=Gray
6. Contact Plated:
   T=Matte Tin over Nickel
   W=Matte Tin over Nickel 150u"
   Y=Bright Tin over Nickel
   C=Gold Flash
   F=Gold Flash,Matte Tin 100u"
   A=Gold 3u"
   B=Gold 3u",Matte Tin 100u"
   D=Gold 5u"
   E=Gold 5u",Matte Tin 100u"
   G=Gold 10u"
   J=Gold 10u",Matte Tin 100u"
   L=Gold 15u"
   M=Gold 15u",Matte Tin 100u"
   U=Gold 30u"
   V=Gold 30u",Matte Tin 100u"
7. Special Options
8. Packing: C= Tray

②: Circuits: 10~64 pin-2008/04/29-C1
①:LH1XX-XXSNBKX000-2007/04/12-C

CONN TOP COMPONENT INC.
TEL:(02)86481727 FAX:(02)86482427

BOM
1: LH1X-XXBKH0
2: QTP-0.64X16.00BN
3: 0

PART NO	LH1XX-XXSNBKX000C	.X ±0.3	.XX ±0.20	.XXX ±0.100
DRAWING NO	LH-00045	EDITION: C2	ITEM: LH	
DRAWN BY	GARY	2008/11/17	SCALE: 1:1	
APPROVAL BY			UNIT: m.m	