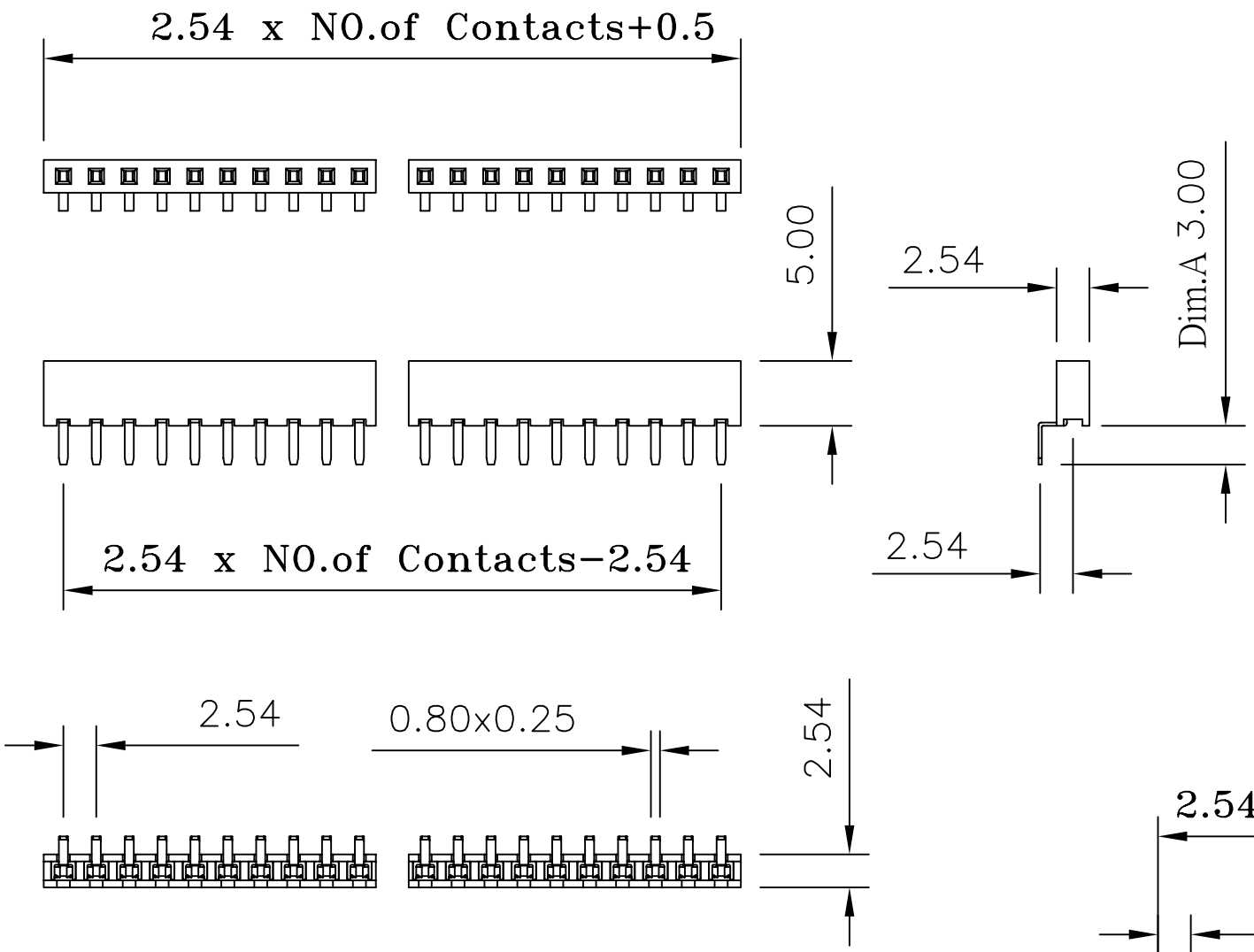


| | |
|---|---|
| Current Rating: | 3 Amps |
| Insulator Resistance: | 5000 Megohms min |
| Contact Resistance: | 20 m ohms max |
| Dielectric Withstanding: | 1000 V AC |
| Operating Temperature: | - 40° ~ +105° C |
| Contact Material: | Phosphor Bronze |
| Insulator Material: | Polyester,UL 94V-0<br>Standard: PBT |

Finish: Tin,Gold Plated
Standard:Gold Flash all over

Note:
Duplex Plating: Gold Plated on contact area,
Tin on solder area

| | |
|---|---|
| Insulator Material: | Polyester,UL 94V-0<br>Standard: Nylon-6T |
| Max Processing Temp: | 230° C for 60 seconds |
| Max Processing Temp: | 260° C for 10 seconds |

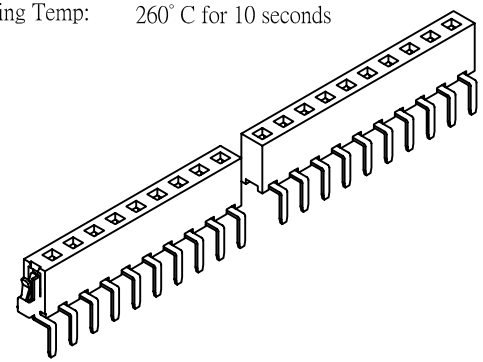

Recommended P.C. Board
Hole Layout

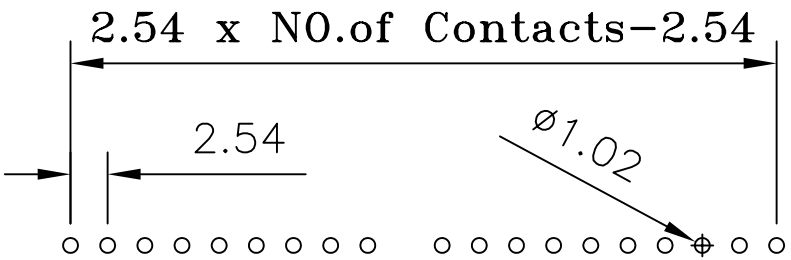


(RoHS Compliant)

P1 X 50 - 1 XX S0 BK X 502 X
1 2 3 4 5 6 7

1. Standard: A= P.B.T.
   N= Nylon-6T
2. Per ROW 03 to 40
3. Taill Style:
   S0= Straight
4. Color: BK=Black
5. Contact Plated:
   T=Matte Tin over Nickel
   W=Matte Tin over Nickel 150u"
   Y=Bright Tin over Nickel
   C=Gold Flash
   F=Gold Flash,Matte Tin 100u"
   A=Gold 3u"
   B=Gold 3u",Matte Tin 100u"
   D=Gold 5u"
   E=Gold 5u",Matte Tin 100u"
   G=Gold 10u"
   J=Gold 10u",Matte Tin 100u"
   L=Gold 15u"
   M=Gold 15u",Matte Tin 100u"
   U=Gold 30u"
   V=Gold 30u",Matte Tin 100u"
6. Special Options
7. Packing:
   B= Tube
   C= Tray

②:P1X50-1XXS0BKX502-2007/06/12-C1
①:P1X50-1XXBKH0-2007/05/18-C

| | | | | | |
|---|---|---|---|---|---|
| CONN TOP COMPONENT INC. | PART NO | P1X50-1XXS0BKX502X | | .X ±0.3 | .XX ±0.20 | .XXX ±0.100 |
| BOM 1: ①: P1X50-1XXBKH0-H<br>2: P1X50T-2537-762S<br>3: | DRAWING NO | PB-00156 | EDITION: C2 | ITEM: PB |
| | DRAWN BY | GARY | 2009/01/22 | SCALE: 1:1 |
| TEL:(02)86481727 FAX:(02)86482427 | APPROVAL BY | | | UNIT: m.m |